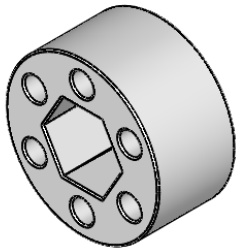

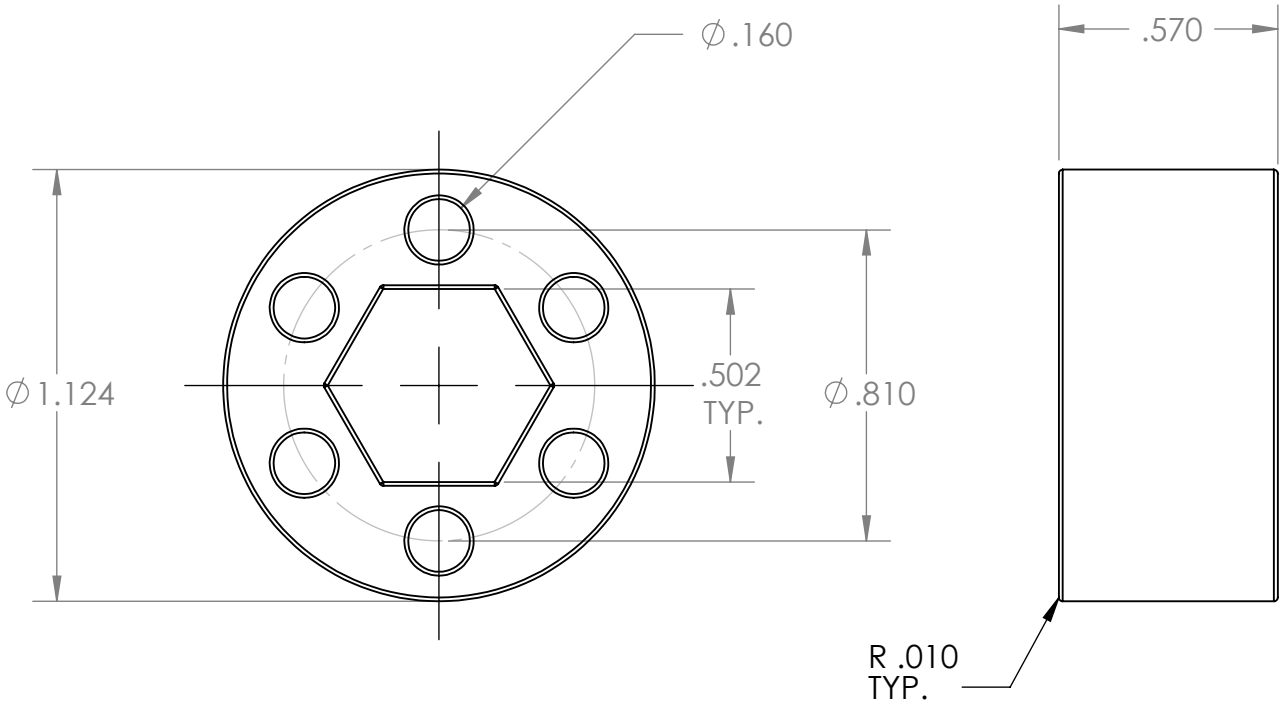

UNLESS OTHERWISE SPECIFIED:		NAME	DATE
DIMENSIONS ARE IN INCHES TOLERANCES: FRACTIONAL ± ANGULAR: MACH ± BEND ±5° TWO PLACE DECIMAL ±0.010 THREE PLACE DECIMAL ±0.005	DRAWN	DB	11/20/13
	CHECKED		
	ENG APPR.		
	MFG APPR.		
INTERPRET GEOMETRIC TOLERANCING PER:	Q.A.		
MATERIAL Polypropylene	COMMENTS:		
FINISH			
DO NOT SCALE DRAWING			

AndyMark

TITLE:

570 x 500 Hex x 1124 Spacer

SIZE	DWG. NO.	REV
A	am-1305	1

SCALE: 2:1 | WEIGHT: | SHEET 1 OF 1

5 4 3 2 1